NOTES:

1. OPERATION TYPE MAY BE PUSH-UP, HAND CHAIN OR ELECTRIC.
2. FOR CRITICAL FITS DUE TO REDUCED AVAILABLE HEADROOM OR SIDEROOM CLEARANCES, CONSULT FACTORY.
3. CLEARANCES SHOWN ARE MAXIMUMS. LESSER CLEARANCES MAY BE POSSIBLE.
4. UNLESS OTHERWISE NOTED, DOORS SHALL BE PROVIDED WITH SLIDE LOCKS AT EACH END OF BOTTOM BAR, ENGAGING GUIDES IN THE LOCKED POSITION.
5. ALL OPENING PREPARATION, ELECTRICAL POWER AND FIELD PAINTING SHALL BE PROVIDED BY OTHERS.
6. SERIES 1950I IS AN INSULATED SERIES 1950.
7. CURTAIN FINISH SHALL BE SILICONE POLYESTER PRE-PAINT OVER GALVANIZED GRADE 80 STEEL.
8. GUIDES, BRACKETS, BOTTOM BAR ANGLE AND HEAD STOPS ARE ZINC COATED.
9. MAXIMUM OPENING SIZE: 12'-0" X 14'-0".
10. RAIN LIP CLEARANCE DIMENSION OUTSIDE OF GUIDE = 4-1/2" MINIMUM
11. GUIDES, BRACKETS, BOTTOM BAR ANGLE AND HEAD STOPS ARE ZINC COATED.
12. 36" MAX HOLE SPACING.

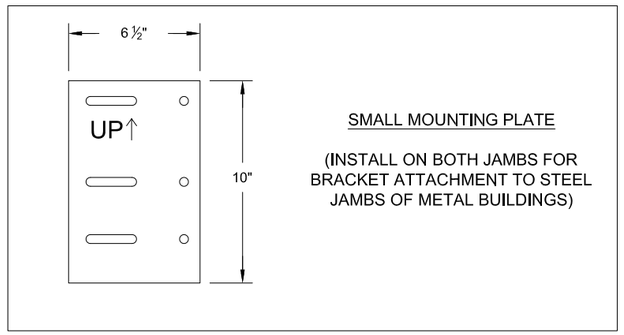

SMALL MOUNTING PLATE

(INSTALL ON BOTH JAMBS FOR BRACKET ATTACHMENT TO STEEL JAMBS OF METAL BUILDINGS)

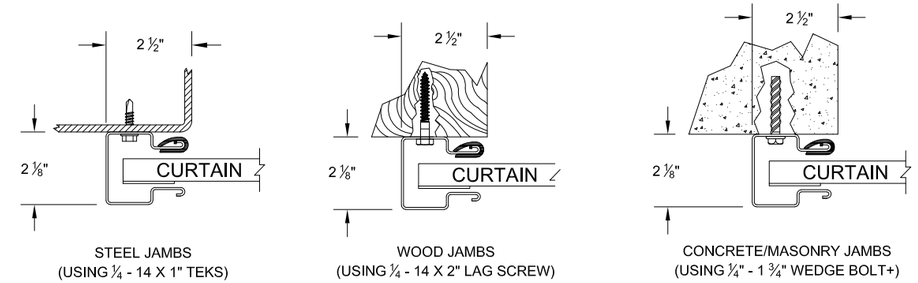

16 GA GUIDE MOUNTING DETAIL

BRACKET ATTACHMENT
CONCRETE/MASONRY: WEDGE-BOLT+, ⅜ X 1 ¾" LONG
WOOD: LAG SCREW, ⅜ X 3" LONG
STEEL: HEX BOLT, GR.5, ⅜ - 16 X 1 ¼" LONG, & ⅜ - 16 GR.2 LOCKNUT

(*) FOR PUSH-UP OPERATION.....4 ½"
FOR HAND CHAIN OPERATION.....5 ½"
FOR ELECTRIC OPERATION.....6"
FOR OUTSIDE OF CHAIN DRIVE.....7"
NOTE: RIGHT SIDE DRIVE SHOWN

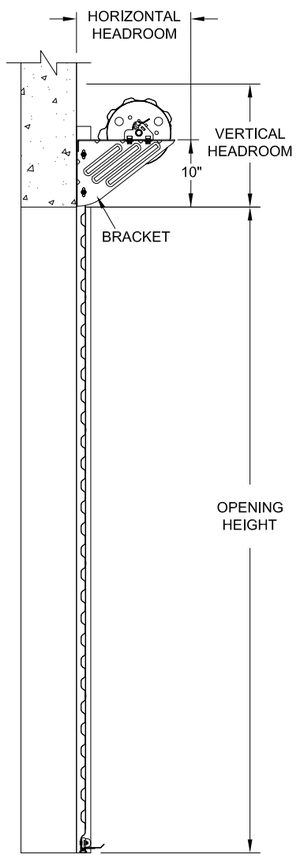

END VIEW

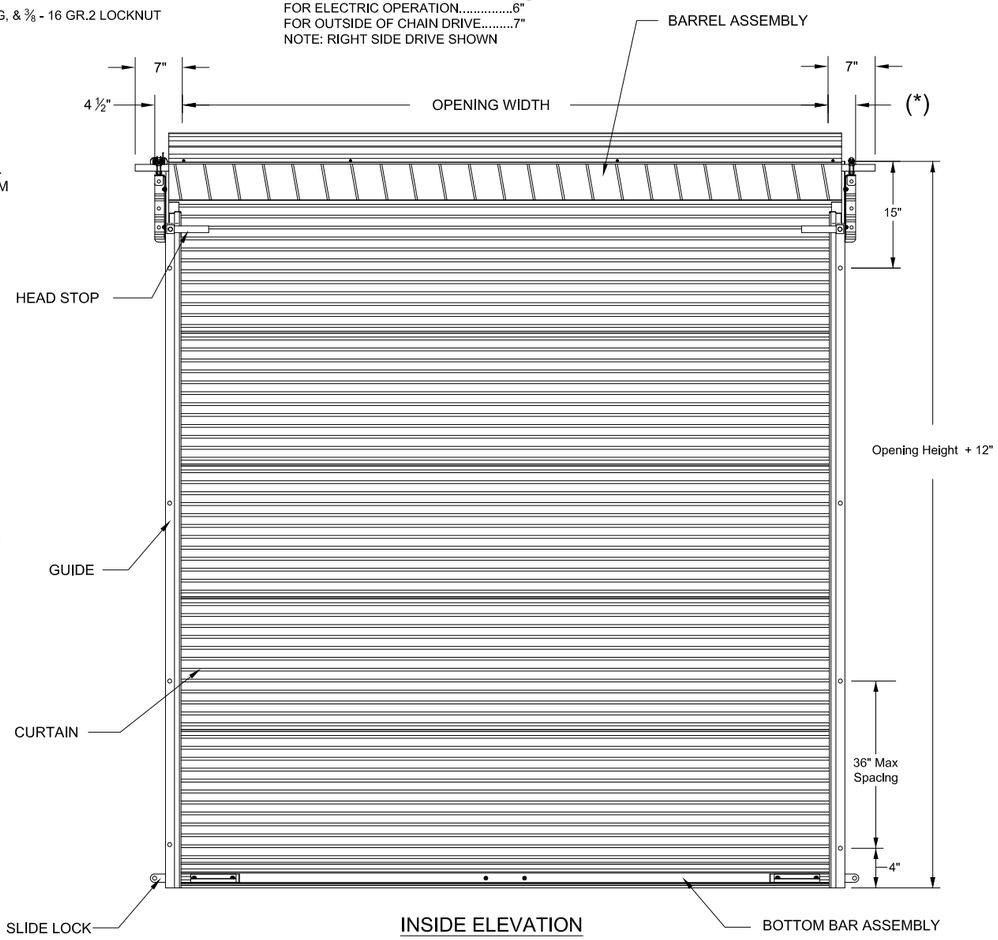

INSIDE ELEVATION

HEADROOM REQUIRED

OPENING HEIGHT	VERTICAL HEADROOM	HORIZONTAL HEADROOM
THRU 8'-0"	19"	19"
OVER 8'-0" THRU 10'-0"	20"	20"
OVER 10'-0" THRU 14'-0"	20 ½"	20"

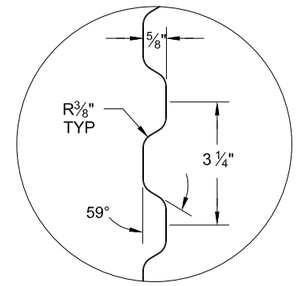

DETAIL A

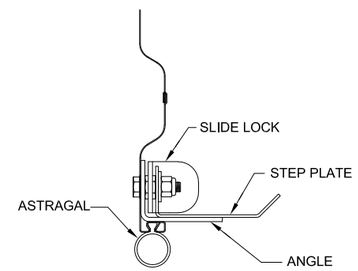

BOTTOM BAR ASSEMBLY

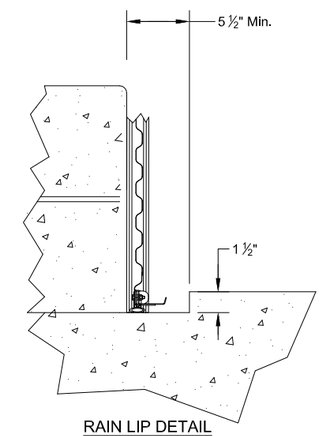

RAIN LIP DETAIL

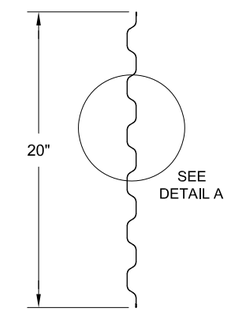

26 GA CURTAIN PANEL DETAIL

A.K. 05/14/2024

COMMERCIAL DOOR SERIES: 1950/1950I

FACTORY ORDER NUMBER	DOOR SERIES		QTY	OPENING SIZE		JAMB TYPE			OUTSIDE CURTAIN COLOR	OPERATION			OPERATION HAND	WEATHERSTRIP			ADDED OPTIONS
	1950	1950I		WIDTH	HEIGHT	STEEL	CONC./ MAS	WOOD		PUSH UP	REDUCED CHAIN	ELECTRIC		TOP	HEADER	SIDE	

CUSTOMER NUMBER:		DATE:	
CUSTOMER NAME:		CONTACT:	
PROJECT NAME:			
PROJECT LOCATION:			
PLANT:		SALESPERSON:	
DRAWN BY:	DATE:	JANUS INTERNATIONAL GROUP, LLC. 135 JANUS INTERNATIONAL BLVD. TEMPLE, GA 30179-4435 770-562-2850 FAX: 770-562-2264	
DRAWING NUMBER:	SHT: OF:		